Ferrite Chip Common-mode Filter For CAN-BUS System,

ACT45B series

Conforming to RoHS Directive

Conformity to RoHS Directive: This means that, in conformity with EU Directive 2002/95/EC, lead, cadmium, mercury, hexavalent chromium, and specific bromine-based flame retardants, PBB and PBDE, have not been used, except for exempted applications.

Introducing the most-advanced ACT45B series having outstanding common-mode impedance characteristics and achieving structural reliability compatible with a high-temperature environment of 150 degrees C.

- Our development of the original core design and high-precision automatic coiling system greatly reinforced the common-mode impedance characteristic while maintaining the conventional small size and shape (2000ohms/10kHz; 3 times greater than conventional).
- Achieving the world-leading class L coupling coefficient of 0.99. Differential-mode impedance in the transmission frequency range is reduced to a low level.
- Surpassing the operating temperature range of –40 to +150 degrees C, it is applicable to the ECUs placed not only inside the engine room, but directly on the engine as well.

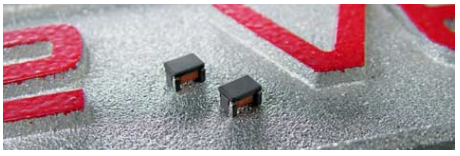

- Metal plates capable of resisting the diverse stresses caused by soldering's thermal expansion and contraction are used at the joints on the circuit boards to achieve high reliability. The original integrated design equipped with a stress-absorbing damper feature delivers high reliability for a long period of time under severe mounting conditions, such as direct placement of the ECU on the engine.
- The original automatic connection system and non-fusion connection structures were developed to firmly integrate coils and metal terminals, providing connection strength that can withstand rapid thermal changes/shocks and intense repetitive vibrational stresses.
- Providing implementation-flexibility in the thermal shock resistance cycle and vibration-proof conductive adhesive application processes as well as lead-free high-temperature reflow processes.

Original coil-connection structure offers excellent implementation reliability and fixing strength.

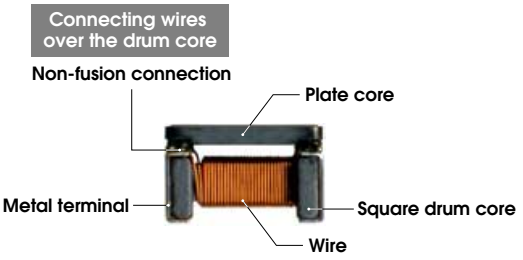

Original terminal electrode and coil-connection structure capable of maintaining land pattern smoothness and solder fillet were applied. Superb implementation reliability and fixing strength were achieved by improving the smoothness of the surfaces of terminal electrodes.

Shapes and dimensions/Basic characteristic

ACT45B series

Shapes and dimensions / Equivalent circuit

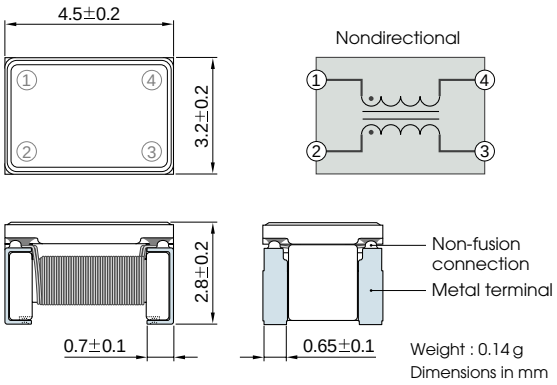

Typical Electrical Characteristics

Part No.	Common-mode impedance (ohm) (at 10MHz)	DC resistance (ohm) (1-line)	Rated current Idc(mA)	Rated voltage Edc(V)	Insulation resistance (Mohm)
ACT45B-510-2P	2000 typ./1000 min.	1.0 max.	200 max.	50 max.	10 min.

Operating temperature range : −40 to +150℃

Recommende PC board pattern
(Reflow process)

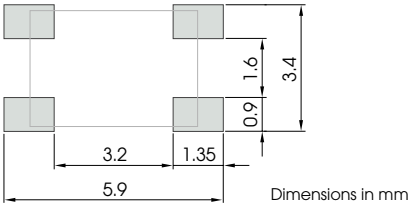

Recommended soldering conditions
Eutectic solder/Reflow process

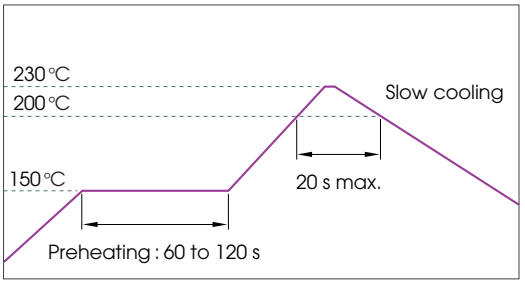

Lead-free solder/High-temperature reflow process

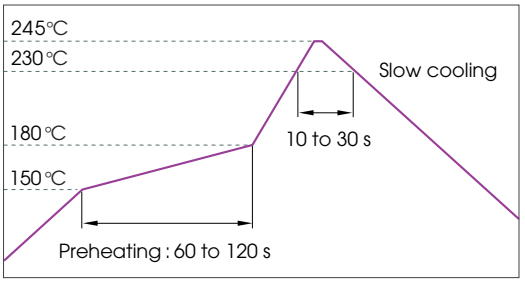

Impedance vs. frequency characteristics

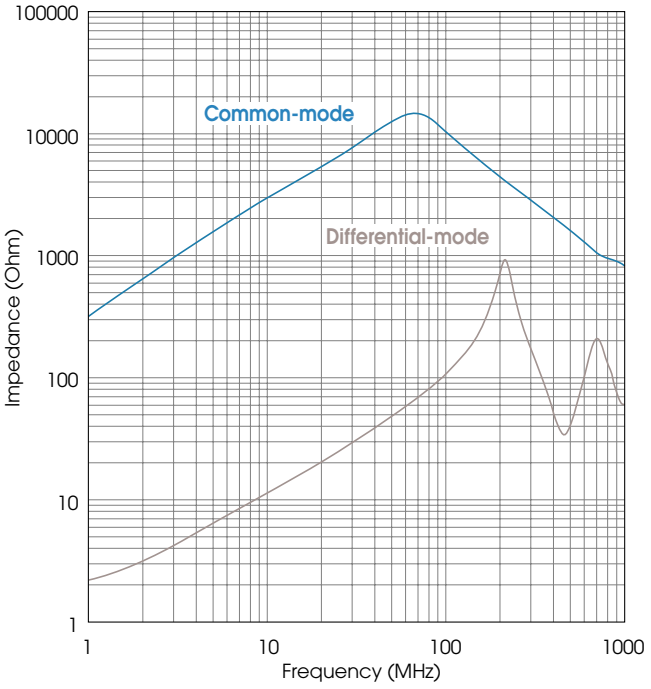

Development background

Car-mounted LAN, commonly known as CAN-BUS, has made rapid improvement as a network system. Its control is not limited to driving and controlling systems, but also diverse devices such as safety systems, including airbags and TPMS (Tire Pressure Monitoring System); media information devices including VICS traffic information communication systems, emergency report systems, ETC automatic fare collection systems, and car-navigation systems; and security devices such as immobilizers.

Increased wire harnesses, the increasingly harsh environment of ECU placement

To cut down on the number of wire harnesses, which hinder cost-cutting and weight-saving, concentrating ECU (Electronic Control Unit) inside the engine room has become the mainstream.These had previously been placed in the vehicle interior.

The electronic components of ECU naturally required adaptability to harsh environmental conditions such as heat, humidity, and physical shock. Direct placement of ECU on the engine surface, transmissions, and motor-controlling devices, has already been a common practice and it is not easy to maintain the functions and reliability of ECU with conventional specifications when the upper limit of working temperature is 125 degrees C.

ACT45B series

Development concepts required for CAN-BUS components in the future

In addition to the temperature of the engine itself, the temperature inside the engine room dynamically changes according to the external temperature and running conditions. Therefore, the components of the ECU require temperature stability to 150 degrees C and robust structures with reliable characteristics under any conceivable stresses from dramatic temperature changes. Also, extensive analysis and improved design of marginal electrical contacts, caused by metal fatigue arising from the expansion and shrinkage of soldered joints, etc., have become increasingly important.

High-noise reduction and high-quality signals regardless of the mounting circuits

The common-node filters of CAN-BUS are required to be of integrated reliability that can sustain operations under harsh conditions and a high-level, broadband common-mode impedance frequency characteristic compatible with diverse output characteristics which are different for each CAN transceiver IC model. With the High-Speed bus networking safety features, such as ABS, airbags, and so forth, it is required that, given the accelerated transmission speed, differential-mode impedance, which affects transmission waveforms, is further-reduced.

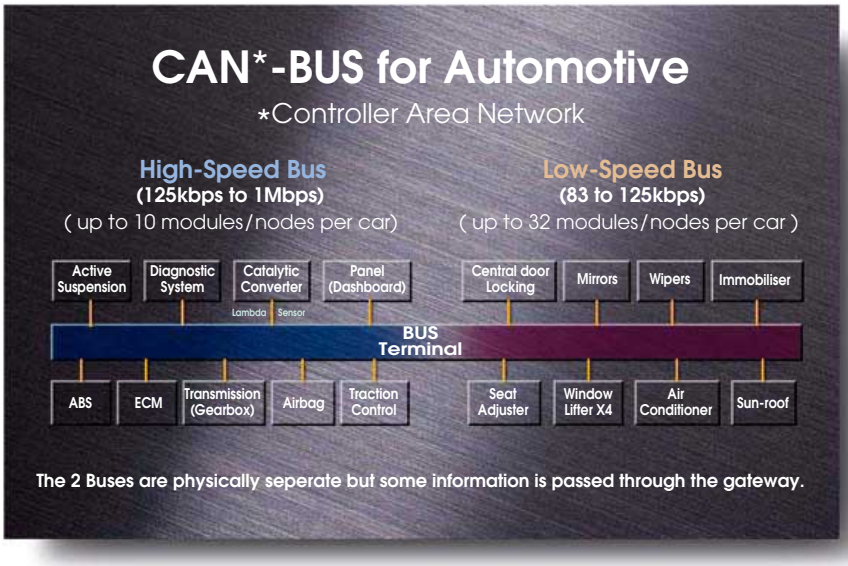

Overview of CAN-BUS system

CAN has two separate busses bordering at a communication speed (baud rate) of 125kbps.

1

"High-Speed Bus (125kbps to 1Mbps)"
connects safety devices, such as ABS and airbags. About ten of these electronic devices can be networked.

2

"Low-Speed Bus (83 to 125bps)"
connects devices providing comfort, such as air-conditioners and seat-controlling units. 40 to 50 of these electronic devices can be networked.

Example of application

CAN High-Speed Bus (150kHz to 1MHz)

ACT45B series

About the common-mode filters for CAN-BUS

The CAN-BUS system uses a differential transmission method which utilizes twist-pair cables. Therefore, this system has an advantage so far as external noise through the cables is concerned. But sufficient precautions against malfunction (immunity reinforcement) and reduction of radiant noises from electrical devices and cables are required, as advanced safety features must be maintained. The method in which shield wires are used inside the BUS cable is uneconomical however. Therefore, applying common-mode filters to each networked ECU(node) is currently widely practiced.

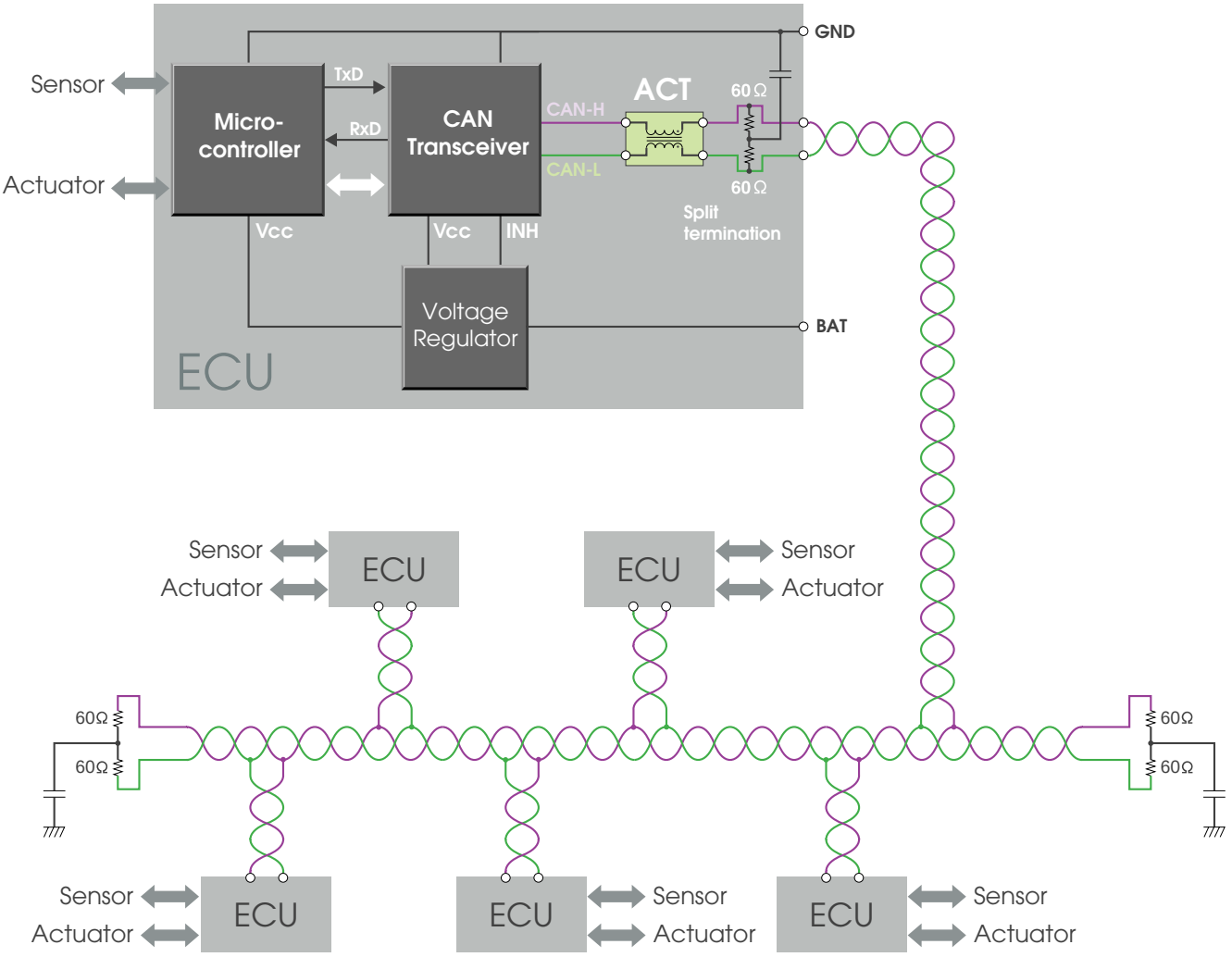

Actual example of CAN-BUS differential transmission signal waveforms

Measuring point : TP1, TP2, TP3, TP4

ACT45B series

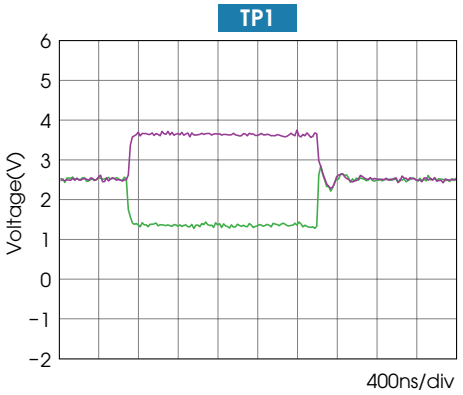

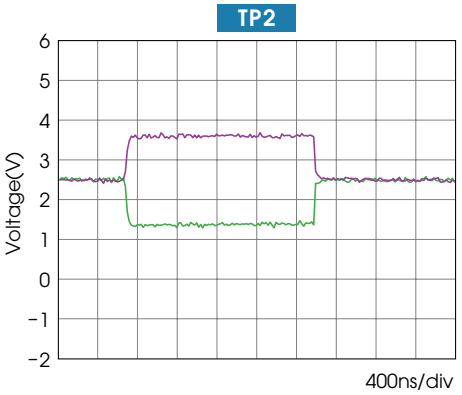

Measurement system/condition

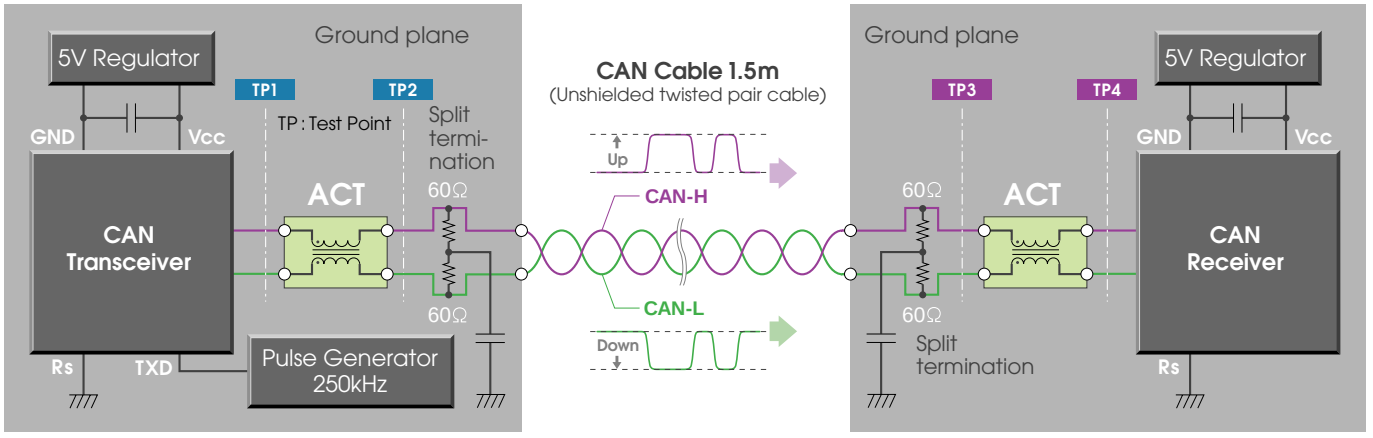

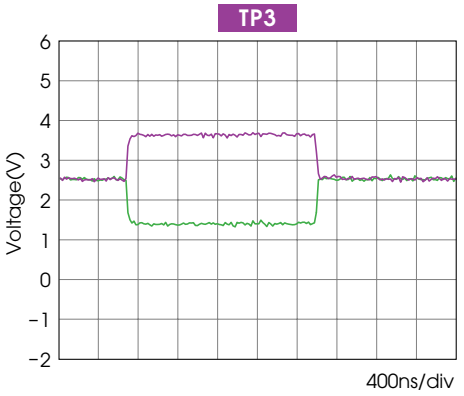

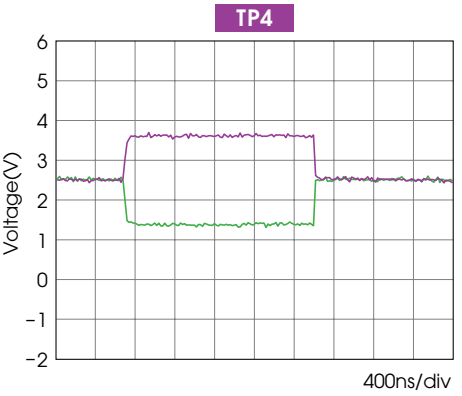

EMI countermeasure example

Example of effectiveness of radiation noise reduction

Comparison of before/after countermeasures

ACT45B series

Radiation electric field intensity vs. Frequency characteristics

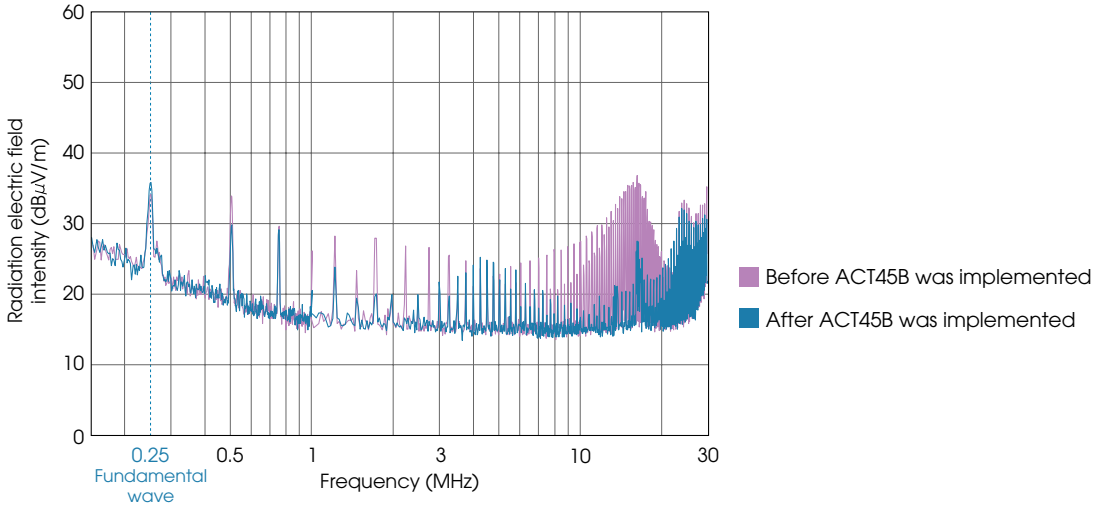

Measurement system/condition

Receiving antenna: monopole / Measurement distance: 1m

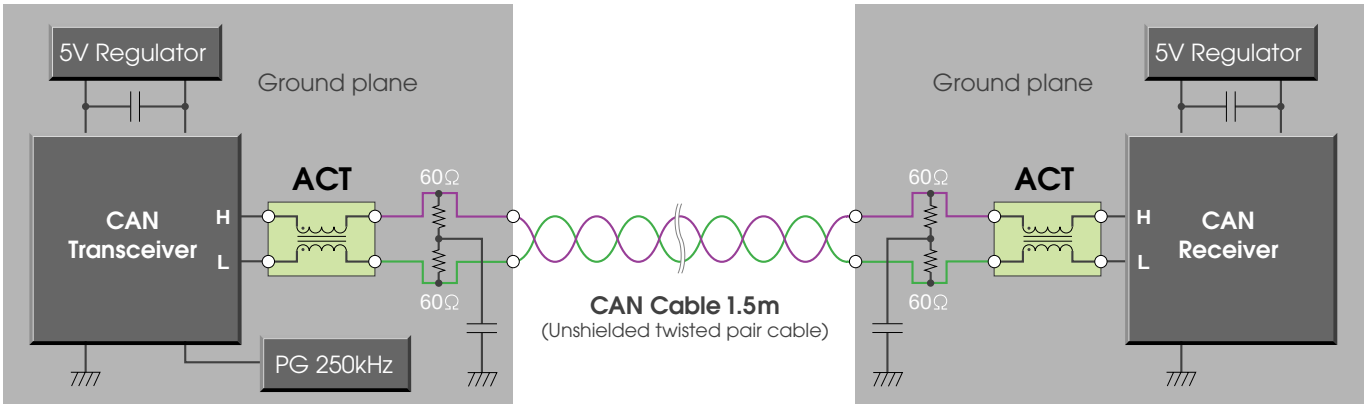

Shielded test board

Shielded test board